M38 - B0708 382 PCS

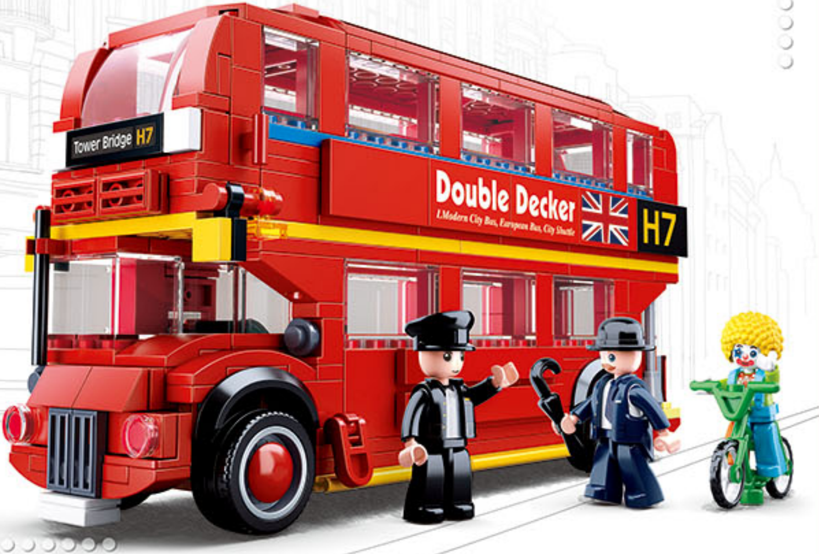
Tower Bridge H7
Double Decker
LModern City Bus, European Bus, City Shuttle
H7

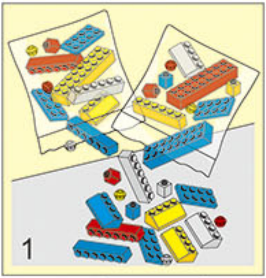
1

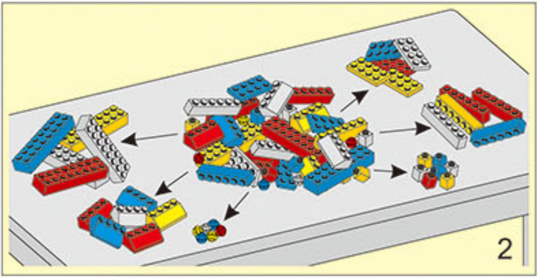
2

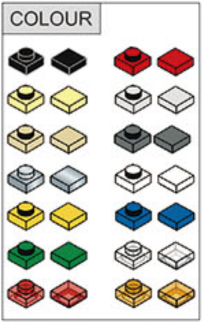

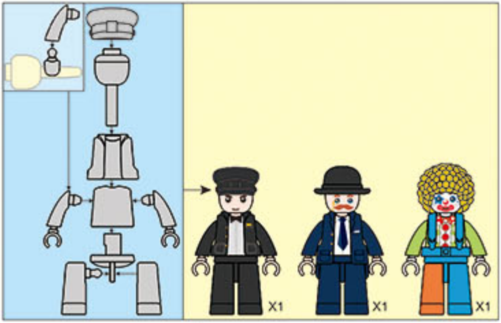

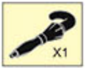

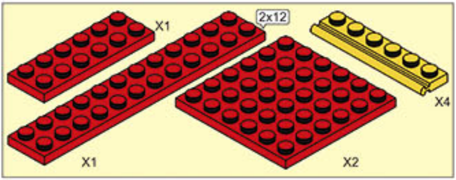
X1
2x12
X4
X1
X2

1

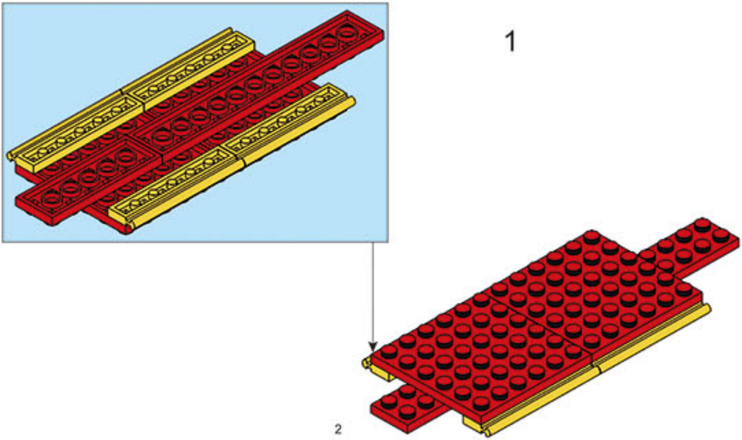

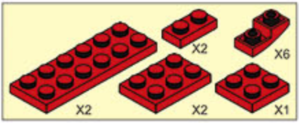
X2
X6
X2
X2
X1

2

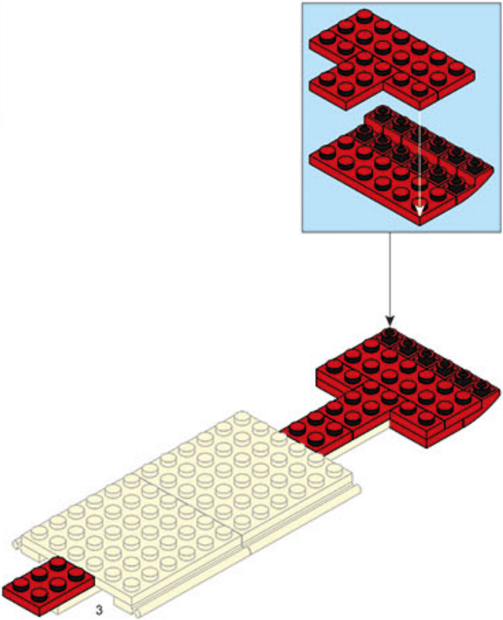

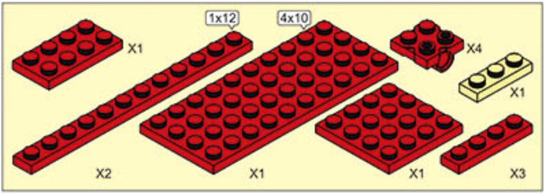
X1
1x12
4x10
X4
X1
X2
X1
X1
X3

3

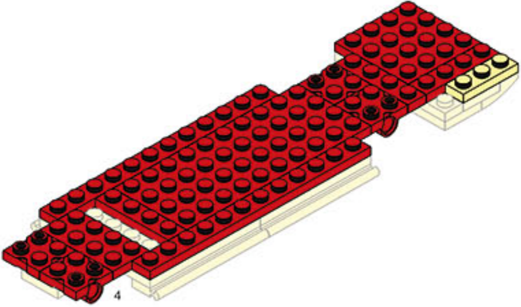

4

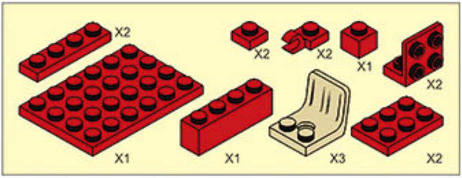
X2
X2
X2
X1
X2
X1
X1
X3
X2

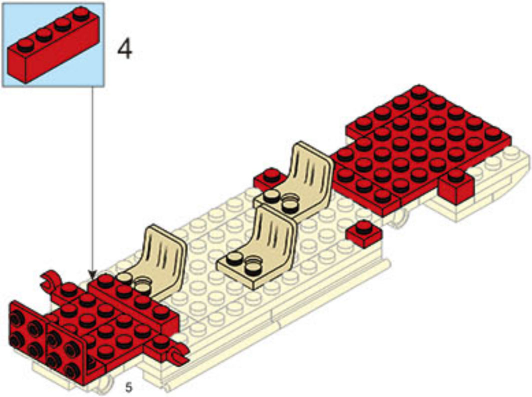

5

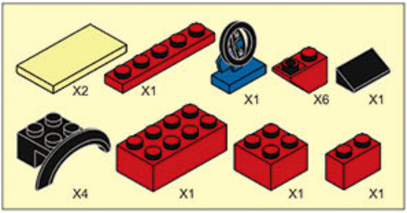
X2
X1
X1
X6
X1
X4
X1
X1
X1

5

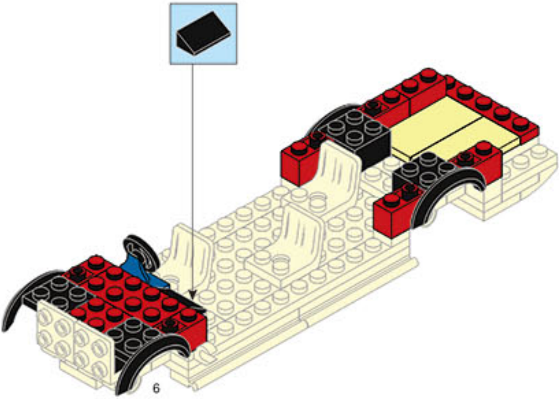

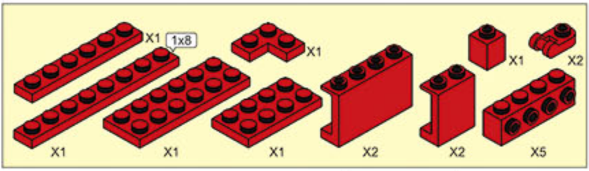
X1
1x8
X1
X1
X2
X1
X1
X1
X2
X2
X5

6

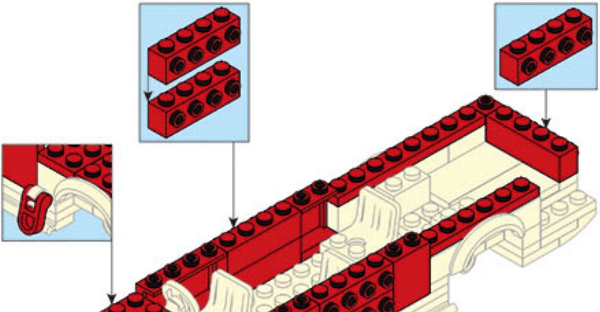

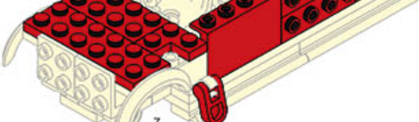

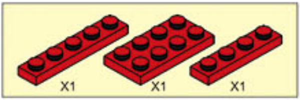

7

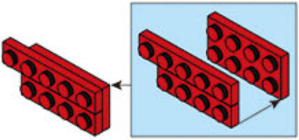

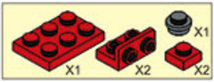

8

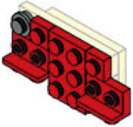

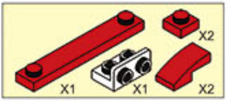

9

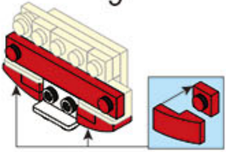

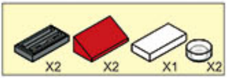

10

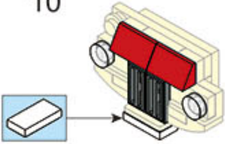

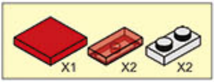

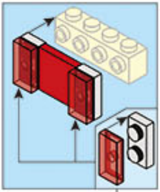

11

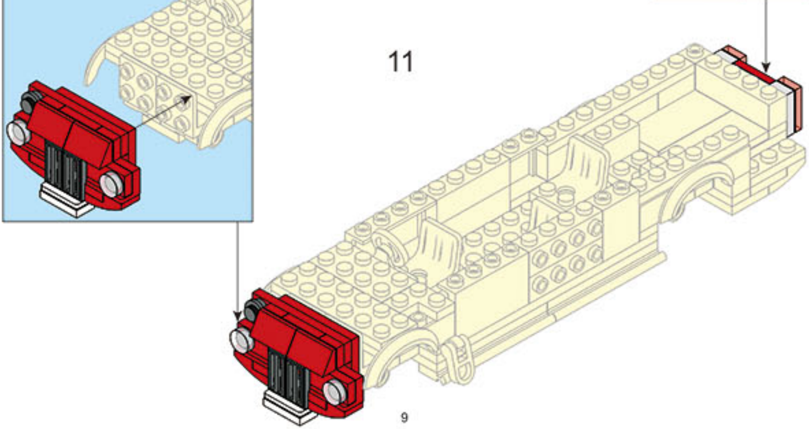

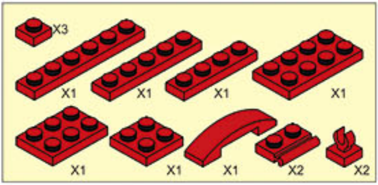
X3
X1
X1
X1
X1
X1
X1
X1
X2
X2

12

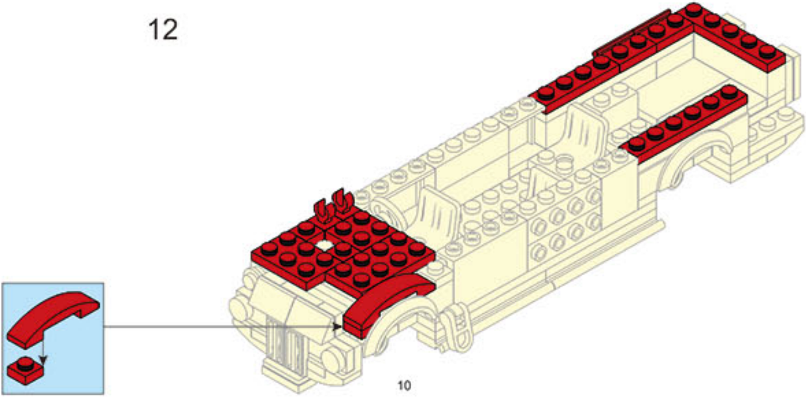

13

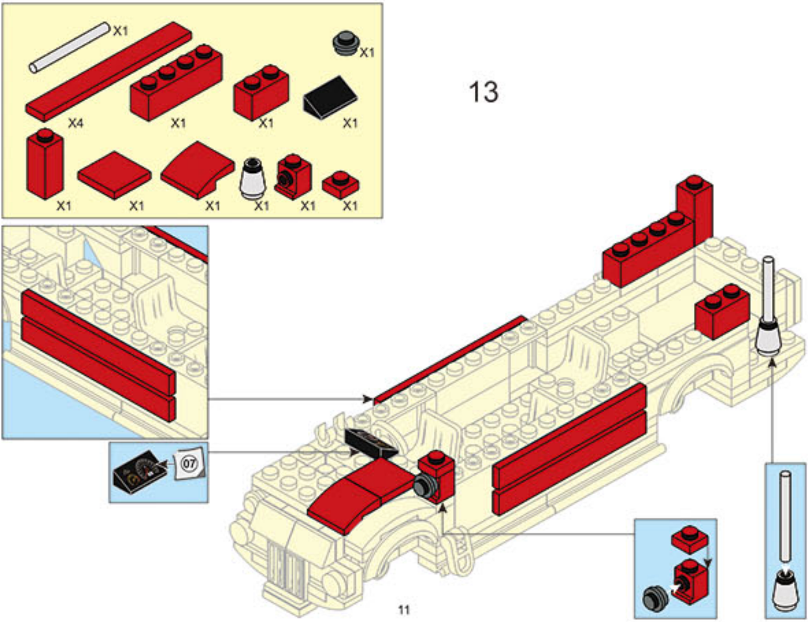
X1
X1
X4
X1
X1
X1
X1
X1
X1
X1
X1
X1
07

14

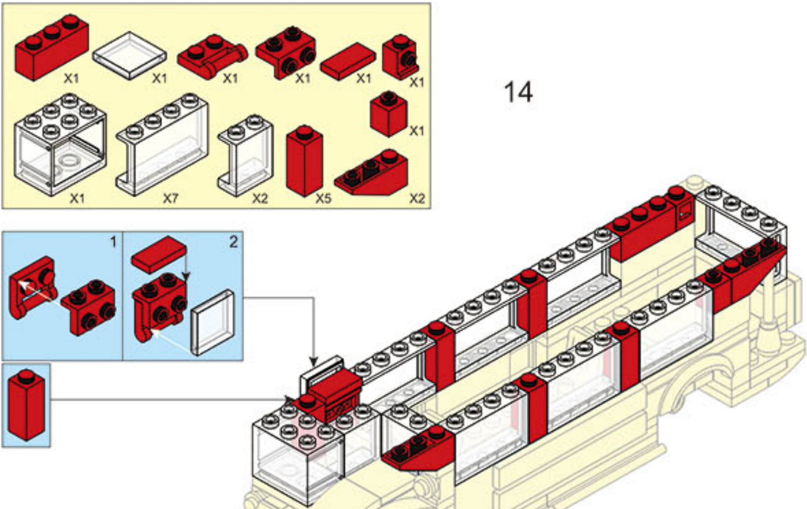
X1
X1
X1
X1
X1
X1
X1
X1
X7
X2
X5
X2
1
2

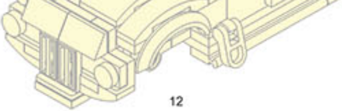

12

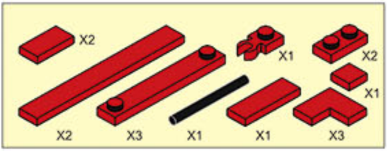
X2
X1
X2
X1
X2
X3
X1
X1
X3

15

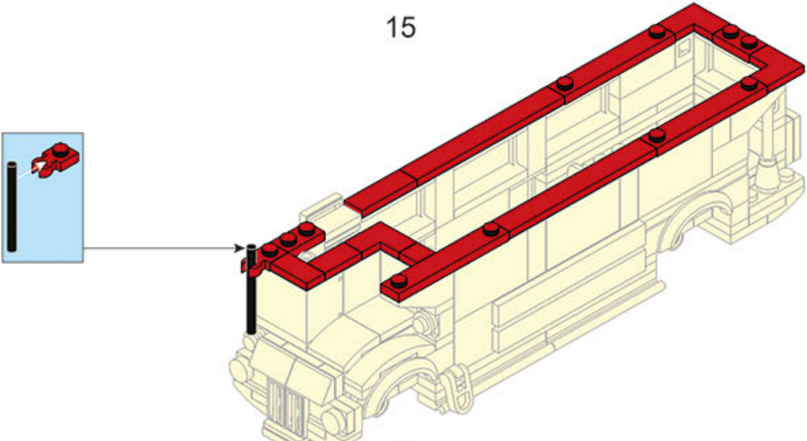

13

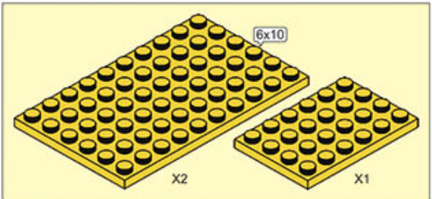

16

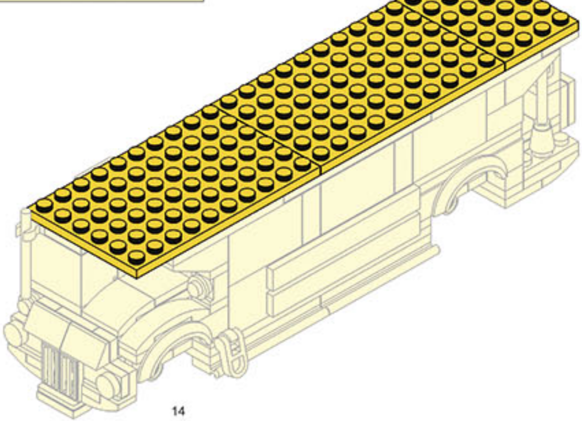

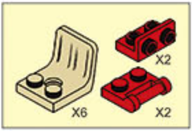

17

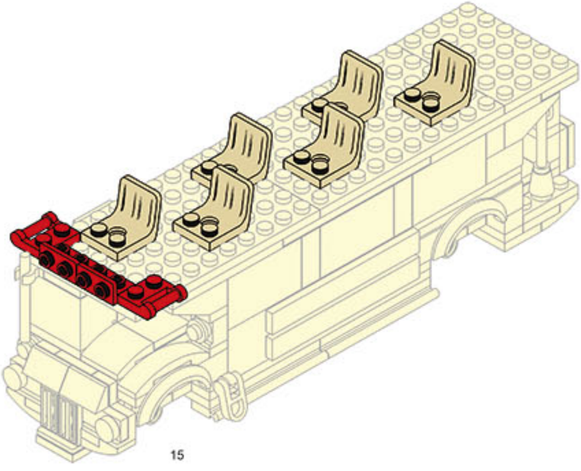

18

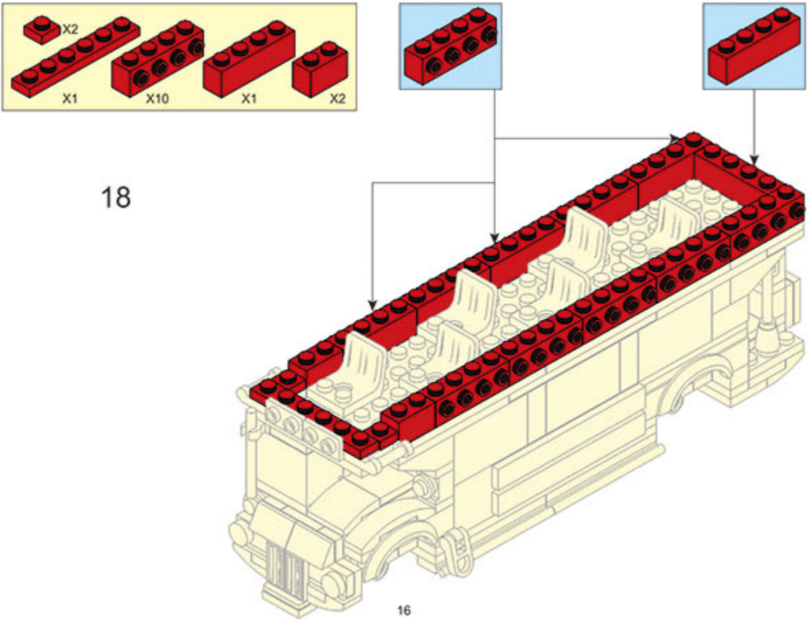
X2
X1
X10
X1
X2

19

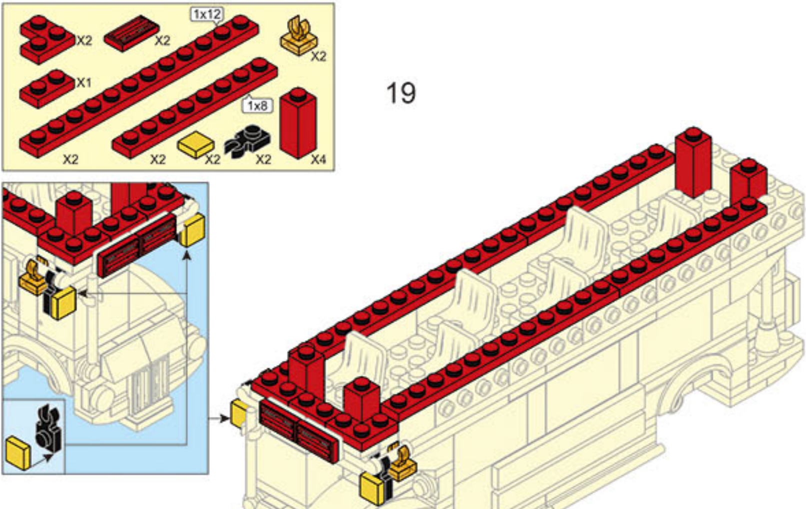
X2
X2
1x12
X2
X1
1x8
X2
X2
X2
X2
X4

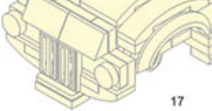

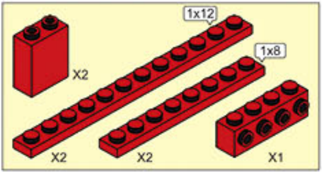
1x12
1x8
X2
X2
X2
X1

20

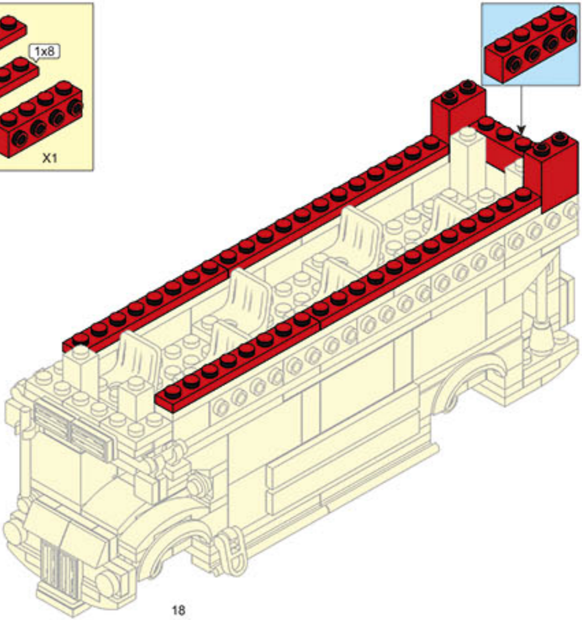

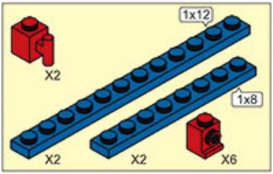
1x12
1x8
X2
X2
X2
X6

21

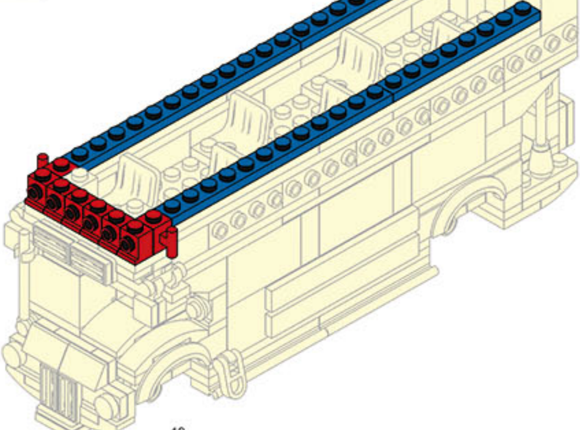

22

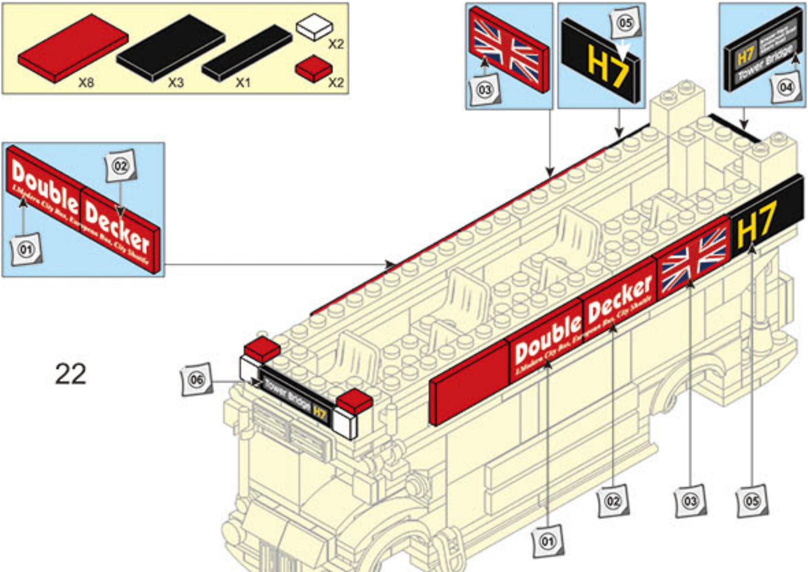
X8
X3
X1
X2
X2
03
05
H7
04
H7
Tower Bridge
02
01
Double Decker
06
Tower Bridge H7
Double Decker
H7
01
02
03
05

23

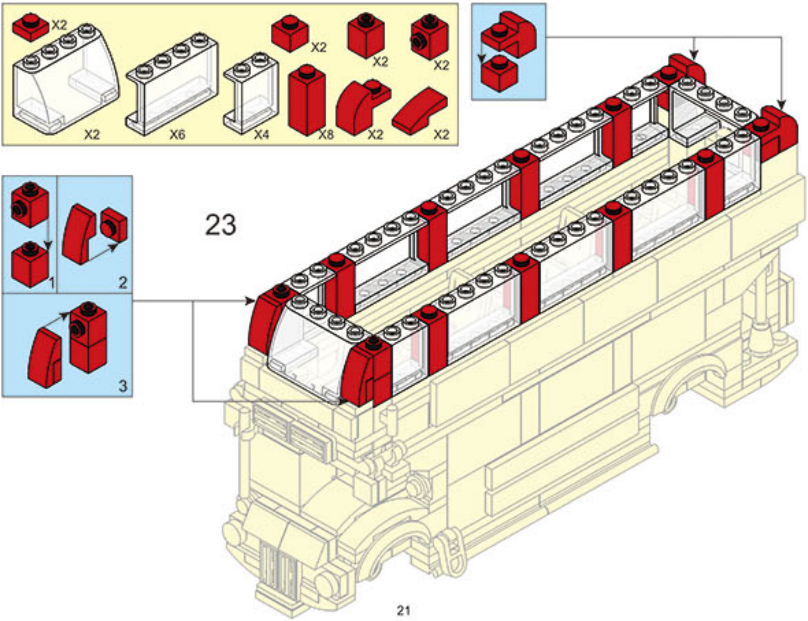
X2
X2
X2
X2
X2
X6
X4
X8
X2
X2
1
2
3

24

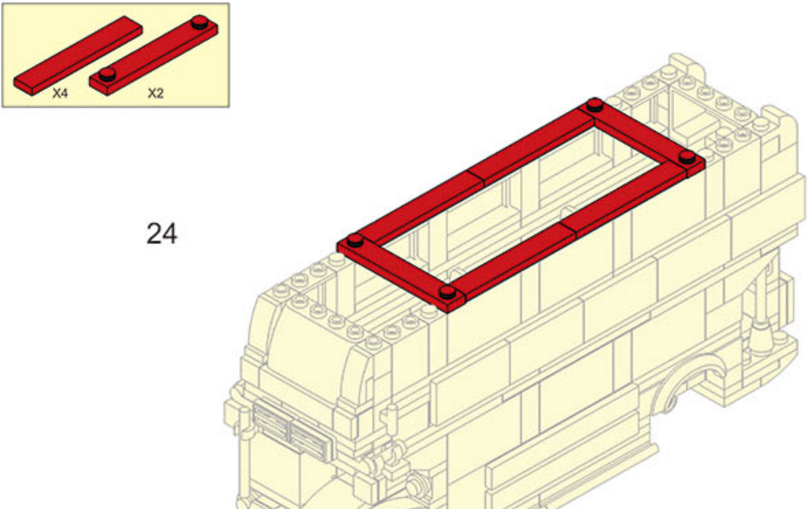

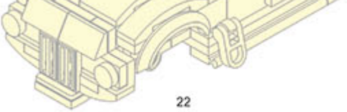

25

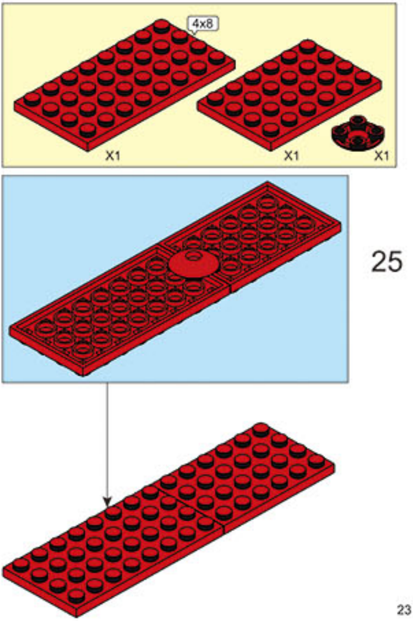

26

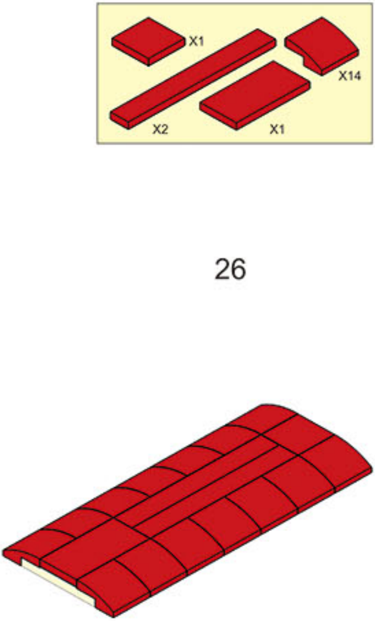

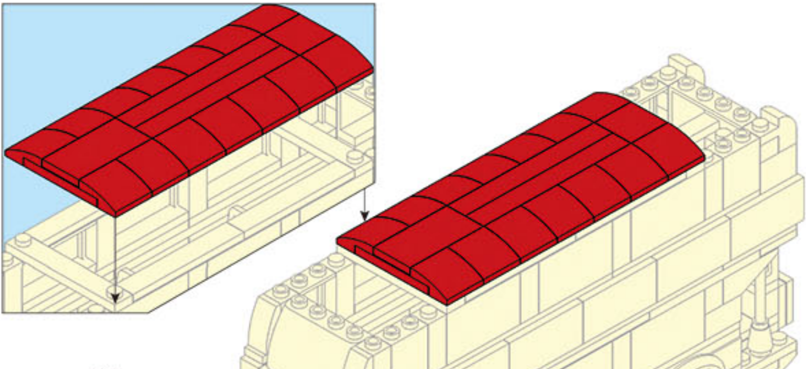

27

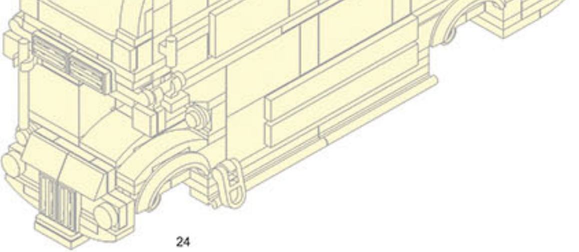

28

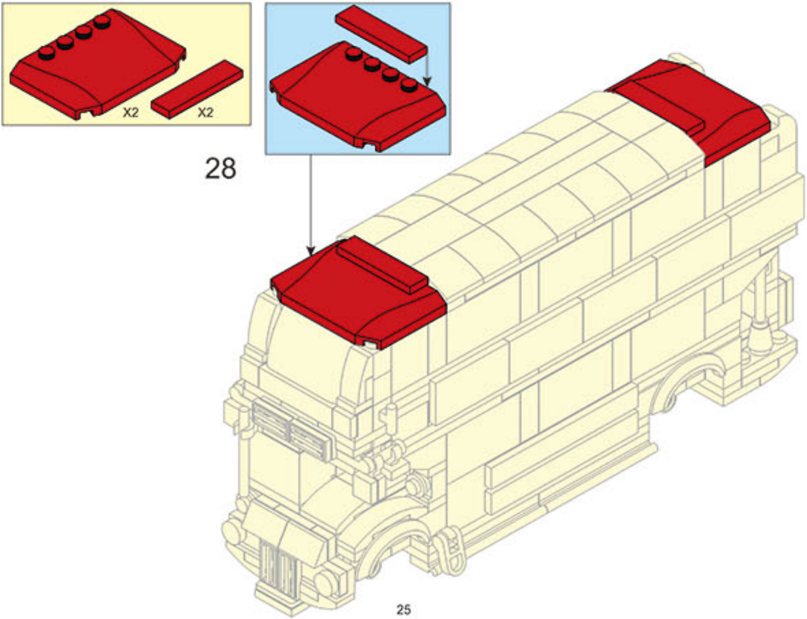

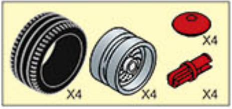

29

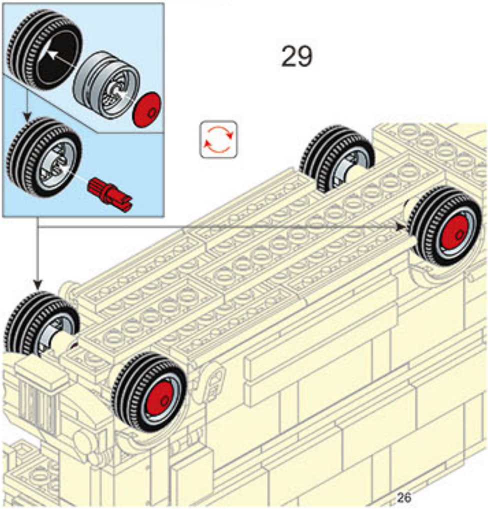

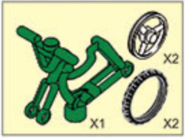

30

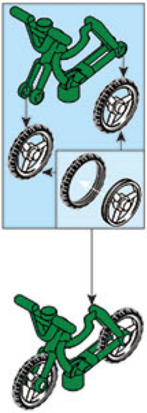

⚠ WARNING:

CHOKING HAZARD - Small parts.
Not for children under 3 years.